## WIRING DIAGRAM

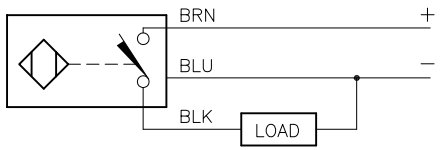


OUTPUT: AP6X

SHORT–CIRCUIT AND OVERLOAD PROTECTED

## LOCKNUT LN–M12

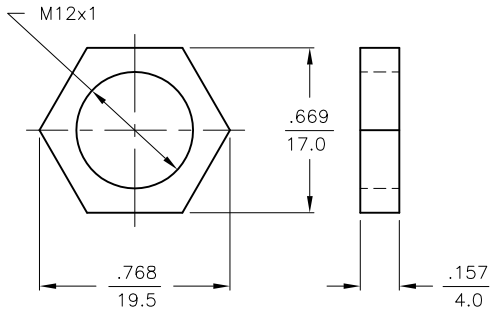


## SPECIFICATIONS

| | |
|---|---|
| RATED OPERATING DISTANCE | 4mm [.158] |
| MOUNTING MODE | FLUSH |
| TEMPERATURE DRIFT | ≤±10% |
| HYSTERESIS | 3–15% |
| MIN. REPEAT ACCURACY | ≤2% |
| OPERATING TEMPERATURE | −25°C to +70°C (−13°F to +158°F) |
| RATED OPERATIONAL VOLTAGE | 10–30 VDC |
| RESIDUAL RIPPLE | ≤10% |
| RATED OPERATIONAL CURRENT | ≤200 mA |
| NO–LOAD CURRENT | ≤15 mA |
| RESIDUAL CURRENT | ≤0.1 mA |
| RATED INSULATION VOLTAGE | ≤0.5 kV |
| SHORT–CIRCUIT PROTECTION | YES |
| MAX. VOLTAGE DROP | ≤1.8 V |
| WIRE BREAKAGE PROTECTION | INCORPORATED |
| REVERSE POLARITY PROTECTION | INCORPORATED |
| OUTPUT FUNCTION | 3–WIRE, NORMALLY OPEN, PNP |
| MAX. SWITCHING FREQUENCY | ≤2 kHz |
| HOUSING MATERIAL | BRASS, CHROME PLATED |
| ACTIVE FACE | PLASTIC, PA12–GF30 |
| CABLE | ø5.2, PVC |
| VIBRATION RESISTANCE | 55 Hz (IN ALL 3 PLANES) |
| SHOCK RESISTANCE | 30 g, 11 ms |
| DEGREE OF PROTECTION | IP 67 |
| SWITCHING STATUS INDICATION | LED, YELLOW |

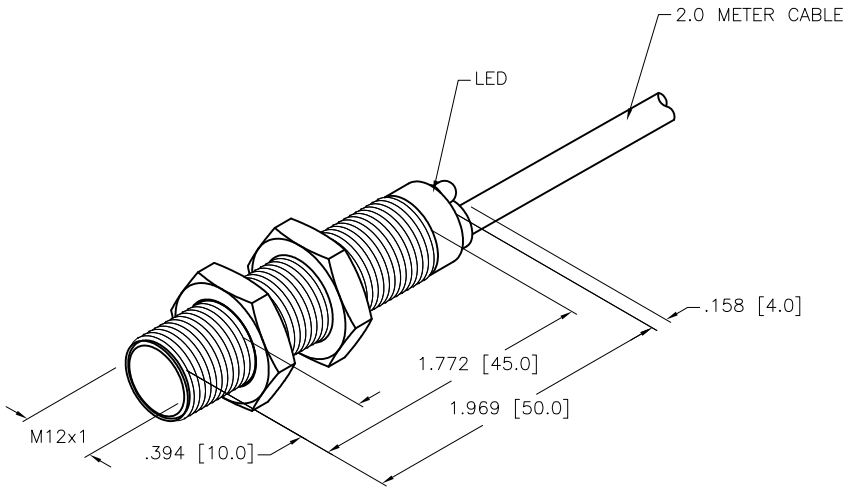


**SOURCE DRAWING - FOR REFERENCE ONLY**

| RELATED DOCUMENTS | 3RD ANGLE PROJECTION | THIS DRAWING IS CONFIDENTIAL AND THE PROPERTY OF TURCK INC. USE OF THIS DOCUMENT WITHOUT WRITTEN PERMISSION IS PROHIBITED. | TURCK INC High Technology Sensors and Automation Controls | 3000 CAMPUS DRIVE MINNEAPOLIS, MN 55441 1–800–544–7769 (763) 553–7300 (763) 553–0708 fax turck.com |
|---|---|---|---|---|
| 1. 2. 3. 4. | | | | |
| MATERIAL | ALL DIMENSIONS DISPLAYED ON THIS DRAWING ARE FOR REFERENCE ONLY | DRFT JBJ / DATE 11/12/02 | DESCRIPTION BI 4–M12–AP6X | |
| | | APVD / SCALE 1=1.0 | | |
| FINISH | CONTACT TURCK FOR MORE INFORMATION | UNIT OF MEASUREMENT **INCH [ MILLIMETER ]** | IDENTIFICATION NO. T4607006 | REV B |
| | | DO NOT SCALE THIS DRAWING | FILE: T4607006 | SHEET 1 OF 1 |

| REV | DESCRIPTION | BY | DATE | ECO NO. |
|---|---|---|---|---|
| B | REMOVE FM LOGO FROM DRAWING | RDS | 03/07/12 | 38270 |

Approved 03/07/2012, work order #26357 by J.M.